| | REVISION DESCRIPTION | CHECK | APP | DATE | REV.NOTICE.NO |
|---|---|---|---|---|---|
| △1 | | | | | |
| △2 | | | | | |
| △3 | | | | | |

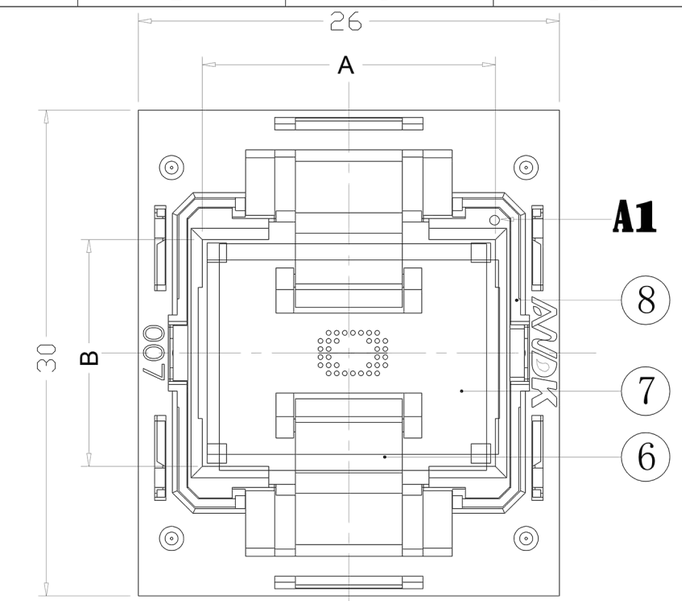


IC Loading Direction
(Center In)

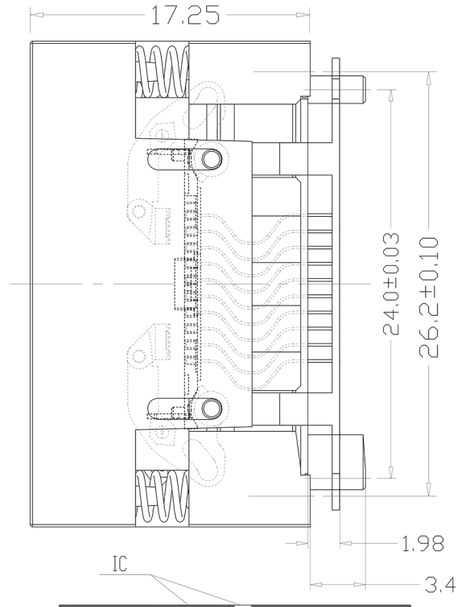


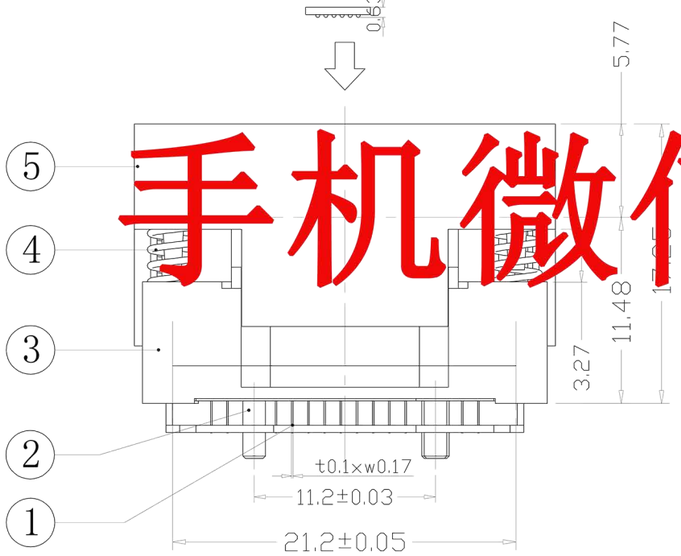


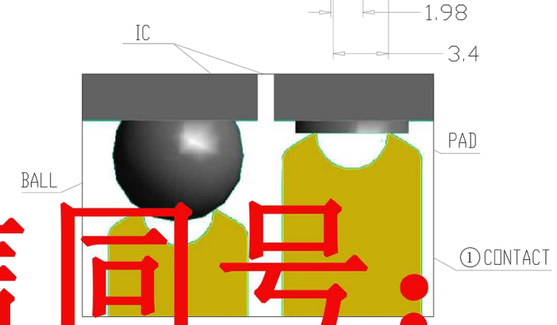


CONTAC TIP DETAIL

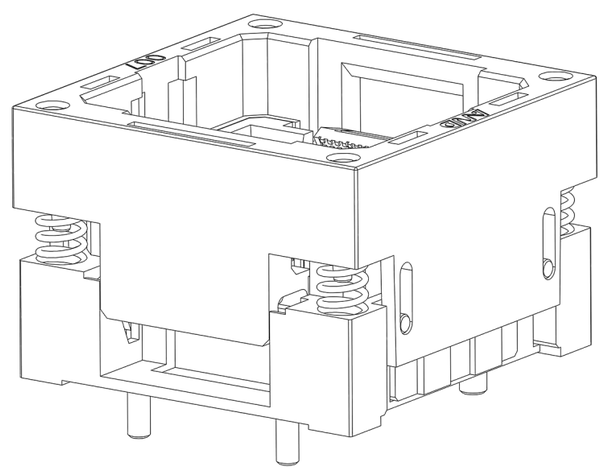

## PCB Pattern(TOP View)

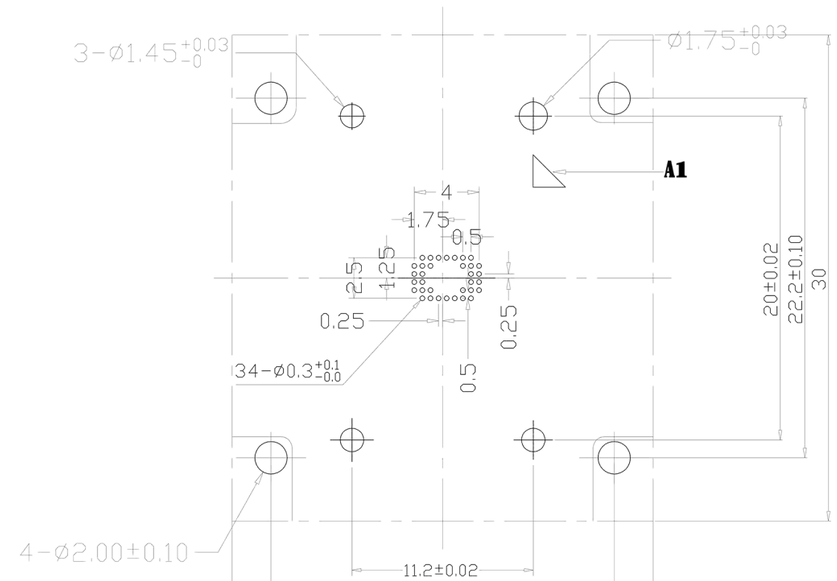


Applicable IC

手机微信同号：18824309157

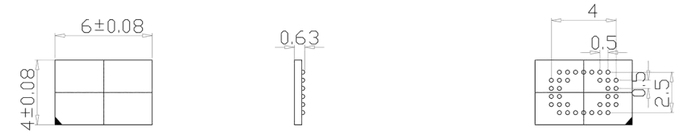


BOTTOM VIEW　　**SIDE VIEW**　　TOP VIEW

## PERFORMANCE

1、Insulation Resistance: 1000MΩ Min.At DC 500V
2、Dielectric Withstanding Voltage For 1 Minute At AC 700V
3、Contact Resistance 30mΩ MAX。at 10mA and 20mV MAX.(Initial)
4、Current Rating: 1A max.
5、Operation Temperature -65°C ~+175°C
6、Contact Force 3-5g Per Pin (Normal)
7、Testing chips with balls of different size or superficial oxidation,even if no ball

| No | Part Number | Name | Material | Q/ty | Note |
|---|---|---|---|---|---|
| 8 | 310-048-D105D | IC GUIDE | PEI/PES | 2 | BLACK |
| 7 | 310-048-C105D | SLIDER | PEI/PES | 1 | BLACK |
| 6 | 310-048-C105D | IC HOLDER | PEI/PES | 2 | BLACK |
| 5 | 310-048-B105D | COVER | PEI/PES | 1 | BLACK |
| 4 | 20-B-4505B | SPRING | SUS | 4 | FOR COVER |
| 3 | 310-048-A105D | BASE | PEI/PES | 1 | BLACK |
| 2 | 310-048-F105D | LOCATOR | PEI/PES | 3 | BLACK |
| 1 | 04-A-1705 | CONTACT | BeCu | 34 | Au PLATING |

| | | | | | |
|---|---|---|---|---|---|
| PROJECTION | | GENERAL TOLERANCES | ±0.10 | TITLE | BGA34 SOCKET |
| | | REV | A | CLASS | 007-22034B-2101 |
| DIMENSION: | mm | SCALE: | 1:1 | DRW. NO | 007-BGA-0.5-34-4X6-B-01 |
| APP: | | DATE: | | | |
| CHECK: | | DATE: | | | |
| DEGK: | ENG03 | DATE: | 20130726 | | |