	REVISION DESCRIPTION	CHECK	APP	DATE	REV.NOTICE.NO
△1					
△2					
△3					

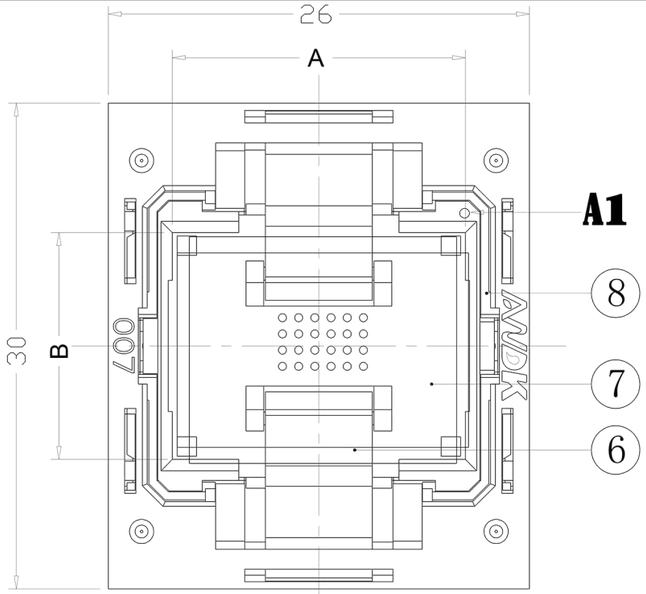

IC Loading Direction
(Center In)

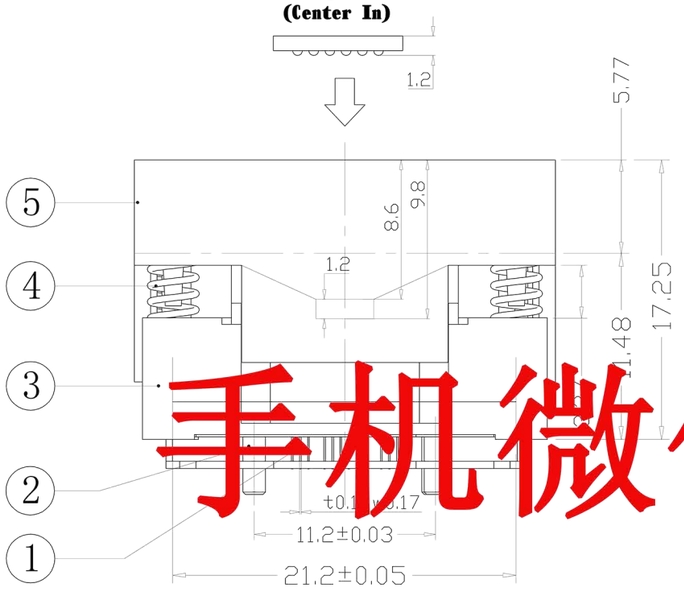

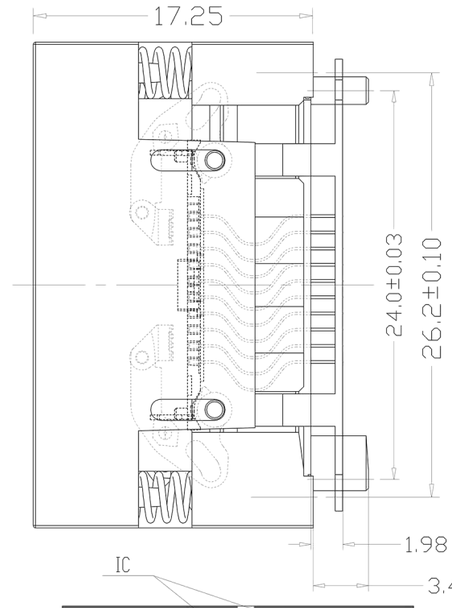

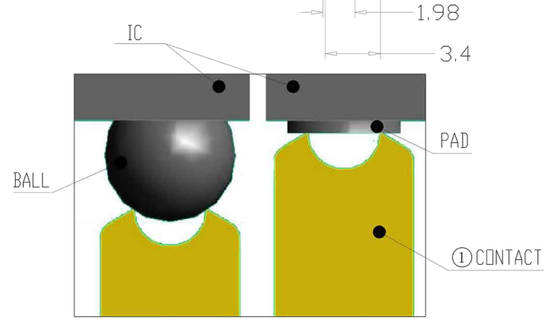

CONTAC TIP DETAIL

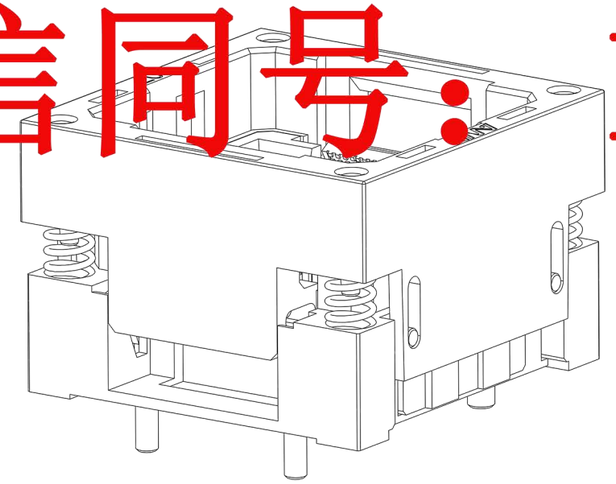

PCB Pattern(TOP View)

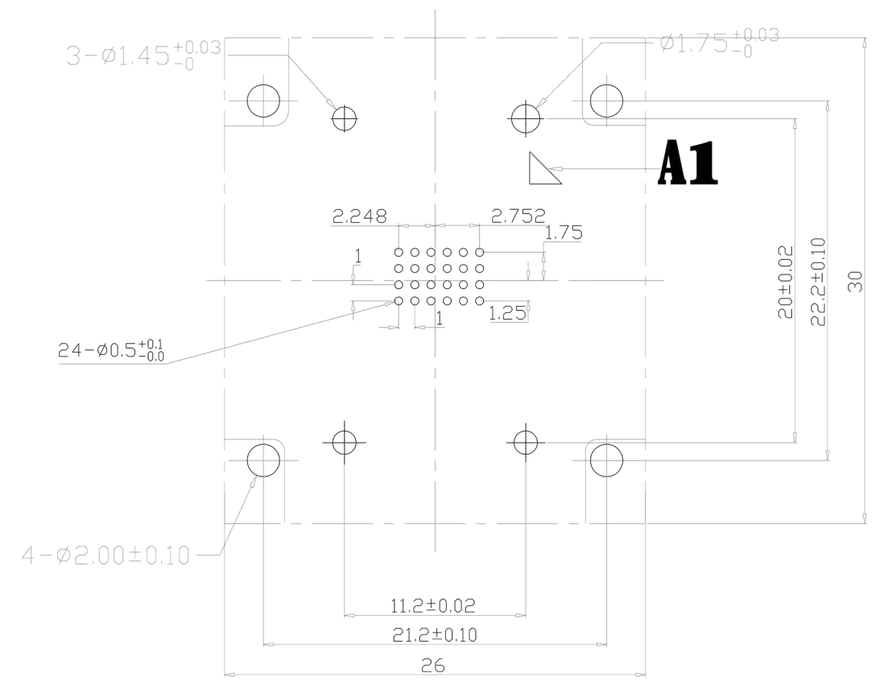

Applicable IC

手机微信同号：18824309157

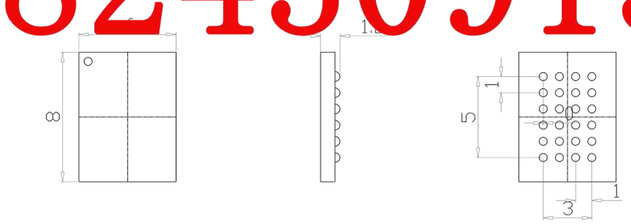

TOP VIEW SIDE VIEW BOTTOM VIEW

PERFORMANCE

1、Insulation Resistance: 1000MΩ Min.At DC 500V
2、Dielectric Withstanding Voltage For 1 Minute At AC 700V
3、Contact Resistance 30mΩ MAX。at 10mA and 20mV MAX.(Initial)
4、Current Rating: 1A max.
5、Operation Temperature -65°C ~+175°C
6、Contact Force 3-5g Per Pin (Normal)
7、Testing chips with balls of different size or superficial oxidation,even if no ball

No	Part Number	Name	Material	Q/ty	Note
8	310-048-D105D	IC GUIDE	PEI/PES	2	BLACK
7	310-048-C105D	SLIDER	PEI/PES	1	BLACK
6	310-048-C105D	IC HOLDER	PEI/PES	2	BLACK
5	310-048-B105D	COVER	PEI/PES	1	BLACK
4	20-B-4505B	SPRING	SUS	4	FOR COVER
3	310-048-A105D	BASE	PEI/PES	1	BLACK
2	310-048-F105D	LOCATOR	PEI/PES	3	BLACK
1	04-A-1705	CONTACT	BeCu	24	Au PLATING

PROJECTION		GENERAL TOLERANCES	±0.10	TITLE	BGA2401 SOCKET
		REV	A	CLASS	007-22024E-2101
DIMENSION:	mm	SCALE:	1:1	DRW. NO	007-BGA-1.0-24-6x8-B-02
APP:		DATE:			
CHECK:		DATE:			
DEGK:	ENG04	DATE:	20130130		