	REVISION DESCRIPTION	CHECK	APP	DATE	REV.NOTICE.NO
△1					
△2					
△3					

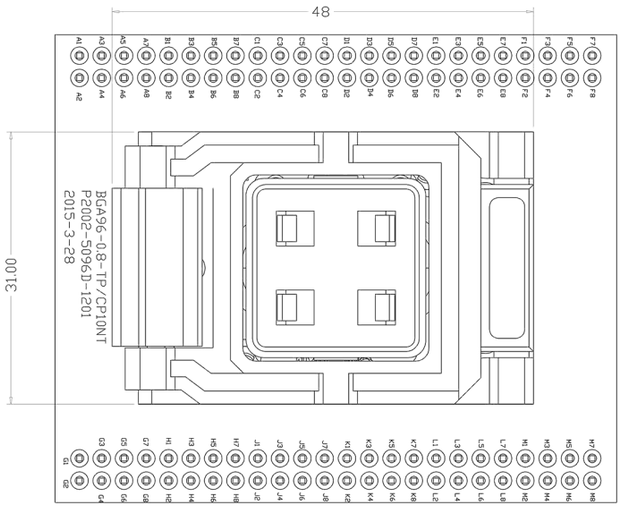

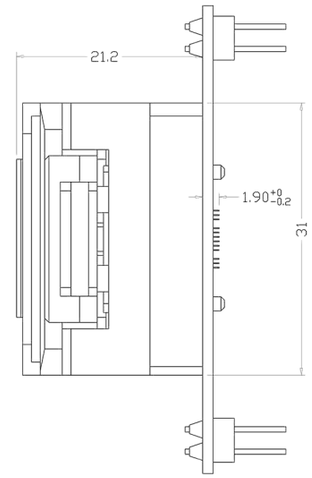

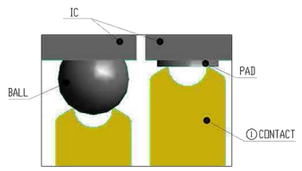

CONTAC TIP DETAIL

PCB PATTERN (TOP VIEW)

IC and Socket have
the same center

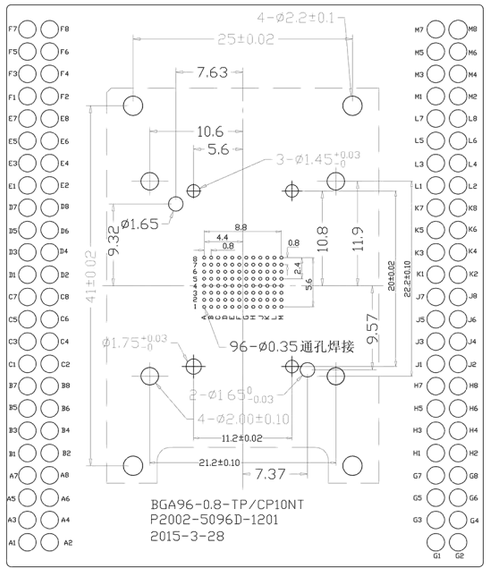

PERFORMANCE

1、Insulation Resistance: 1000MΩ Min.At DC 500V
2、Dielectric Withstanding Voltage For 1 Minute At AC 700V
3、Contact Resistance 30mΩ MAX。at 10mA and 20mV MAX.(Initial)
4、Current Rating: 1A max.
5、Operation Temperature -45°C ~+170°C
6、Life Span 25,000 Times (Mechanical)

手机微信同号：18824309157

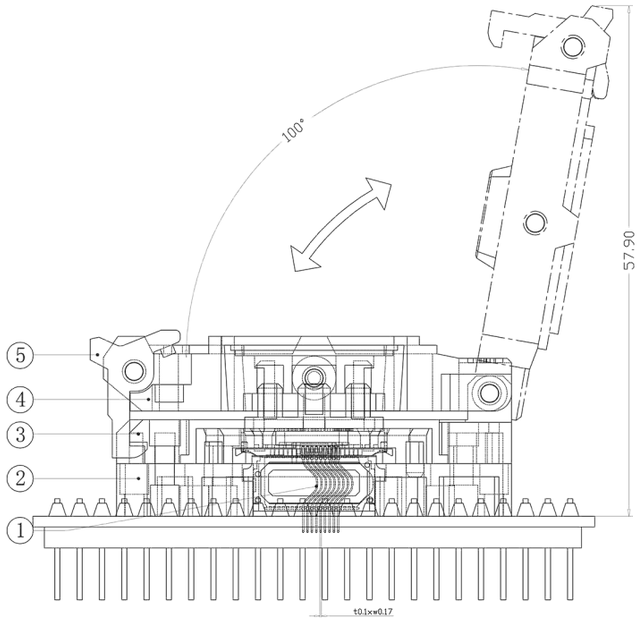

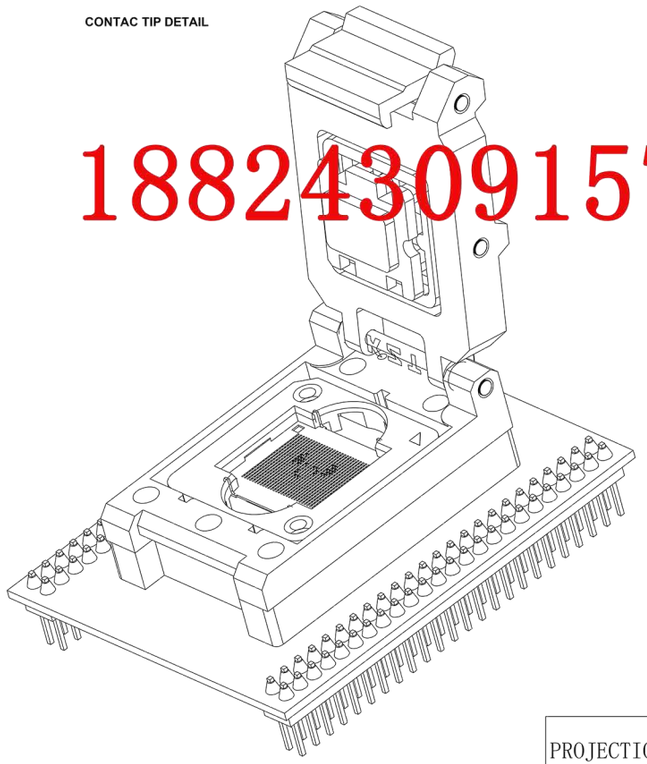

APPL ICABLE IC

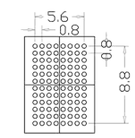

BOTTOM VIEW

SIDE VIEW

No	Part Number	Name	Material	Q/ty	Note
5	P0001-04	LATCH	PEI	1	BLACK
4	P0001-02	OUTER LID	PEI	1	BLACK
3	P0001-01	BASE	PEI	1	BLACK
2	P0001-00	TOP PLATE	PEI	1	BLACK
1	04-A-1705	CONTACT	BeCu	96	Au PLATING

PROJECTION		GENERAL TOLERANCES	±0.10	TITLE	BGA96-0.8 SOCKET
		REV	A	CLASS	BGA96-0.8-CP10NT
DIMENSION:	mm	SCALE:	1:1	DRW. NO	P2002-5096D-1201
APP:		DATE:			
CHECK:		DATE:			
DEGK: ENG03		DATE: 20150529			