	REVISION DESCRIPTION	CHECK	APP	DATE	REV.NOTICE.NO
△1					
△2					
△3					

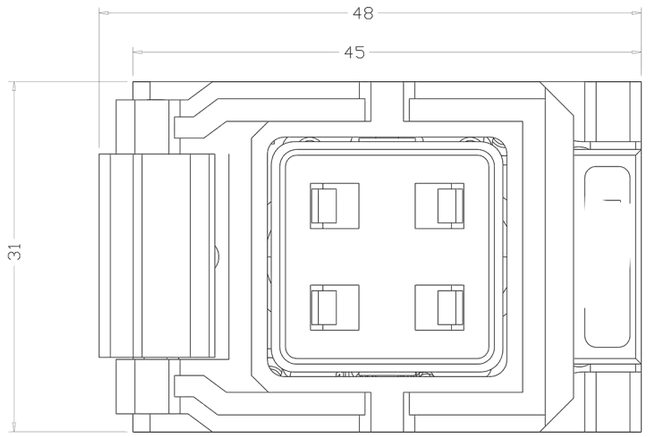

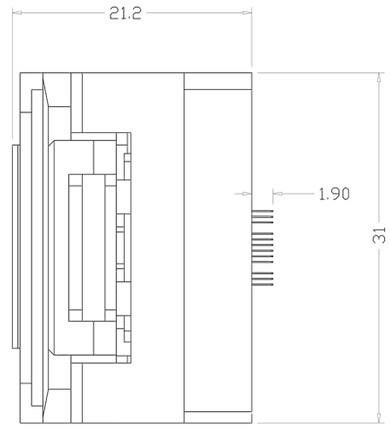

PCB PATTERN (TOP VIEW)

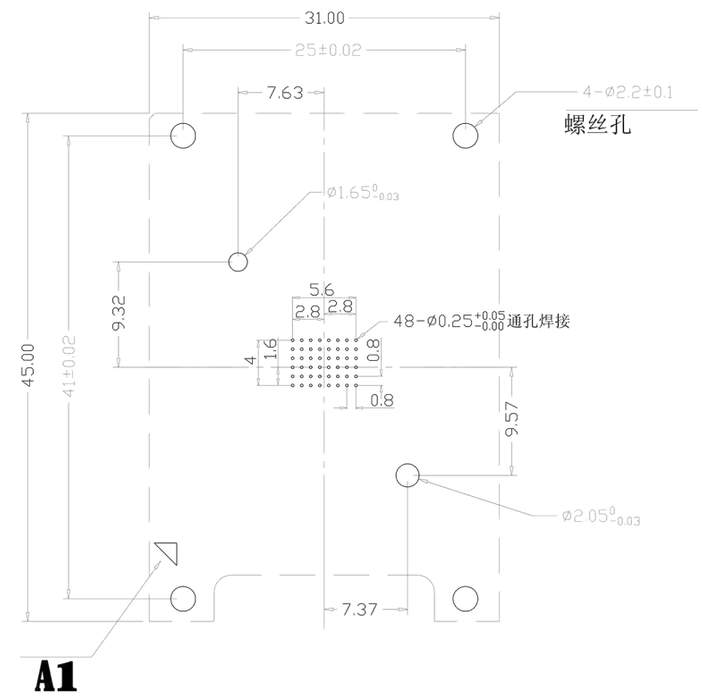

PERFORMANCE

1、Insulation Resistance: 1000MΩ Min.At DC 500V
2、Dielectric Withstanding Voltage For 1 Minute At AC 700V
3、Contact Resistance 30mΩ MAX。at 10mA and 20mV MAX.(Initial)
4、Current Rating: 1A max.
5、Operation Temperature -65°C ~+175°C
6、Life Span 25,000 Times (Mechanical)

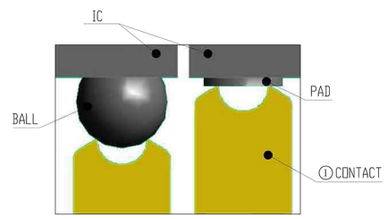

CONTAC TIP DETAIL

手机微信同号：18824309157

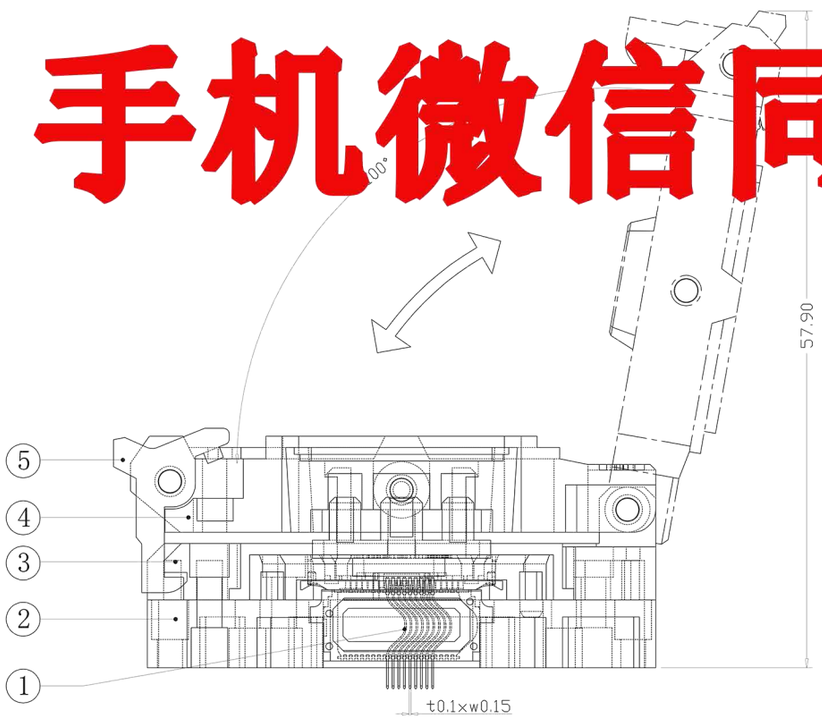

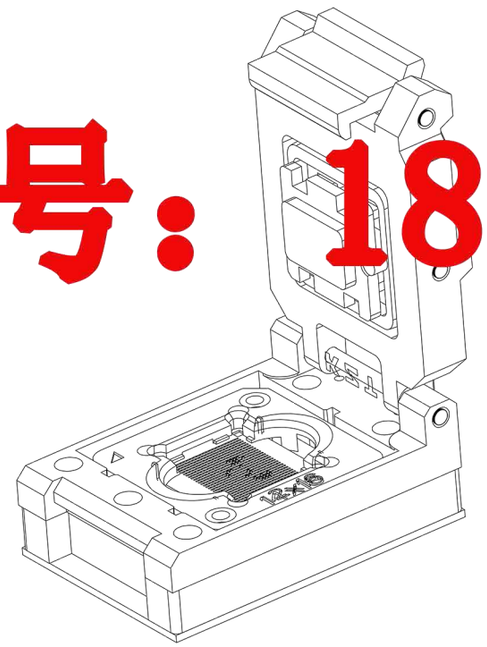

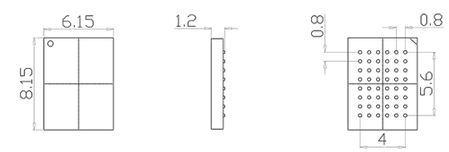

TOP VIEW **SIDE VIEW** BOTTOM **VIEW**

No	Part Number	Name	Material	Q/ty	Note
5	P0001-04	LATCH	PEI	1	BLACK
4	P0001-02	OUTER LID	PEI	1	BLACK
3	P0001-01	BASE	PEI	1	BLACK
2	P0001-00	TOP PLATE	PEI	1	BLACK
1	04-A-1705	CONTACT	BeCu	48	Au PLATING

TOLERANCE	PROJECTION		GENERAL TOLERANCES	±0.10	TITLE: BGA48-0.8 SOCKET
			REV	A	CLASS: BGA48-0.8-CP33NT
X. ±0.50	DIMENSION: mm		SCALE: 1:1		DRW. NO: P2002-5048D-1201(6.15X8.15)
X.X ±0.25	APP:		DATE:		
X.XX ±0.10	CHECK:		DATE:		
X.XXX ±0.05	DEGK: ENG03		DATE: 20160311		